सत्यमेव जयते
महाराष्ट्र शासन

राज्य विज्ञान शिक्षण संस्था
(प्रादेशिक विद्या प्राधिकरण)
रविनगर, नागपूर- ४४०००१.

दुरध्वनी क्र. ०७१२-२५६२९८९/२५६२९८० **ई-मेल** directorsise@gmail.com

जा. क्र. / राविशिसं/ ३५- WISF/२०२६ दिनांक: /११/२०२६

प्रति,
शिक्षणाधिकारी (प्राथमिक / माध्यमिक),
जिल्हा परिषद, (कोल्हपुर,परभणी,सातारा,नागपूर, वर्धा,धाराशिव,लातूर,गडचिरोली)

विषय: नेहरू सायन्स सेंटर, मुंबई येथे आयोजित ३५ व्या पश्चिम भारत विज्ञान मेळावा (35th Western India Science Fair - WISF) २०२६-२७ मध्ये विद्यार्थी व शिक्षकांच्या सहभागाबाबत.

संदर्भ: संचालक, नेहरू सायन्स सेंटर, मुंबई यांचे पत्र क्र. NSCM/१७०२७/०२/२०२६/०६, दि. ०६/११/२०२५

महोदय / महोदया,

उपरोक्त संदर्भिय विषयान्वये कळविण्यात येते की, नेहरू सायन्स सेंटर, मुंबई **(NSCM)** राष्ट्रीय विज्ञान संग्रहालय परिषद **(NCSM),** सांस्कृतिक मंत्रालय, **भारत सरकार यांच्या अंतर्गत कार्यरत** संस्थेमार्फत **दिनांक ११ ते १३ जानेवारी, २०२७** या कालावधीत नेहरू सायन्स सेंटर, मुंबई येथे ३५ व्या पश्चिम भारत विज्ञान मेळाव्याचे **(WISF 2026-27)** आयोजन करण्यात आले आहे.

विद्यार्थ्यांमध्ये वैज्ञानिक दृष्टिकोन, **नाविन्यपूर्ण संशोधन वृत्ती आणि शैक्षणिक प्रगतीला चालना देण्यासाठी हा** विभागीय **(Zonal Level)** मेळावा एक अत्यंत महत्त्वाचे व्यासपीठ आहे. सदर प्रदर्शनामध्ये महाराष्ट्र राज्याच्या वतीने अधिकृत प्रकल्प व शैक्षणिक साहित्य नामांकित करावयाचे असल्याने, सोबत जोडण्यात आलेल्या पत्रात नमूद आपल्या जिल्ह्यातील प्राथमिक व माध्यमिक शाळांमधील विद्यार्थी व शिक्षकांना यांना सहभागी होण्याबाबत अवगत करून आपल्या स्तरावरून या बाबत उचित कार्यवाही करण्यात यावी.

प्रदर्शनाबाबत महत्त्वाच्या सूचना व निकष:

१. राज्यस्तरीय कोटा व विभाग: या मेळाव्यासाठी महाराष्ट्र राज्यातून एकूण ०५ विद्यार्थी विज्ञान प्रकल्प आणि वैयक्तिक शिक्षकांची ०३ शैक्षणिक साधने **(Teaching Aids)** निवडण्यात आली आहेत व तसे नामांकन नेहरू सायन्स सेंटर, मुंबई येथे ३५ व्या पश्चिम भारत विज्ञान मेळाव्याचे **(WISF 2026-27)** पाठवण्यात आले आहेत.

२. प्रकल्प गट रचना: प्रत्येक सहभागी विद्यार्थी प्रकल्पाच्या गटामध्ये ०२ विद्यार्थी व ०१ मार्गदर्शक शिक्षक यांचा समावेश असणे आवश्यक आहे.

३. प्रस्ताव सादर करण्याची अंतिम मुदत:

आपल्या जिल्ह्यातील पात्र विद्यार्थी व शिक्षकांचे नावे सोबत जोडलेल्या यादीत नमूद आहेत. करिता आपल्या जिल्ह्यातील निवड झालेल्या व विद्यार्थी व शिक्षकांनी नेहरू सायन्स सेंटर, मुंबई यांना त्यांचे प्रस्ताव अर्जासह **दिनांक २४ डिसेंबर, २०२६** पर्यंत पाठविणे ई-मेल द्वारे पाठवावे बंधनकारक आहे त्याची एक प्रत संचालक, राज्य विज्ञान शिक्षण संस्था (प्रादेशिक विद्या प्राधिकरण),रविनगर, नागपूर यांना त्यांच्या अधिकृत ई-मेल वर पाठवावे.

५. उपस्थिती व निवास व्यवस्था (निवड झालेल्या अधिकृत स्पर्धकांसाठी):

यादीतील निवड झालेल्या अंतिम स्पर्धकांनी **दिनांक ११ जानेवारी, २०२७ रोजी सकाळी ९:०० वाजेपर्यंत** नेहरू सायन्स सेंटर, मुंबई येथे उपस्थित राहणे आवश्यक आहे. सदर स्पर्धकांना **दिनांक १३ जानेवारी, २०२७ रोजी सायंकाळी ६:०० वाजल्यानंतर** किंवा दुसऱ्या दिवशी सकाळी परतीचा प्रवास करता येईल.

अधिकृतरीत्या निवड झालेल्या स्पर्धकांची स्थानिक निवास व भोजनाची व्यवस्था आयोजकांमार्फत संस्थेच्या आवारात करण्यात येईल. जागेच्या मर्यादेमुळे कोणत्याही अतिरिक्त किंवा अनधिकृत व्यक्तीस प्रवेश/निवास दिला जाणार नाही.

तरी, सदर बाब महत्त्वाची समजून आपल्या जिल्ह्यातील निवड झालेल्या विद्यार्थी व शिक्षकांना विहित मुदतीत कार्यमुक्त करण्याची कार्यवाही करावी.

सोबत: नेहरू सायन्स सेंटर, मुंबई यांचे पत्र व मार्गदर्शक पुस्तिका (विहित नमुन्यांसह).

e-mail :- education@nehrusciencecentre.gov.in

आपला विश्वासू,

Digitally signed by
Rajkumar Pralhadrao Awasare
Date: 20-11-2026 15:42:31

(डॉ. राजकुमार अवसरे)
संचालक
राज्य विज्ञान शिक्षण संस्था
(प्रादेशिक विद्या प्राधिकरण)
रविनगर, नागपूर

प्रत माहितीस्तव सविनय सादर:

१. मा. आयुक्त (शिक्षण), शिक्षण आयुक्तालय महाराष्ट्र राज्य, पुणे.
२. मा. संचालक, राज्य शैक्षणिक संशोधन व प्रशिक्षण परिषद, महाराष्ट्र, पुणे
३. मा. शिक्षण उपसंचालक(कोल्हपुर, नागपूर, लातूर ,छ.संभाजीनगर) यांना विभागीय स्तरावर पाठपुरावा करण्याच्या विनंतीसह.
४.डॉ.अनंदिता चाटर्जी, क्युरेटर/प्रमुख शिक्षण विभाग, नेहरू सायन्स सेंटर, मुंबई

Participant Student List for 35th Western India Science Fair(WISF)-2026-27

Sr. No.	Student Name	School Name and Address	Name of Exhibit	Guide Teacher	E-MAIL	M. No.
1	ANIRUDDHA SANTOSH DESAI	Kalbhairy Road, Gadhinglaj Tal Gadhingaj Dist Kolhapur	Sustainable Farming Using Robot	Krishna Tukaram Shivane	kshivne23@gmail.com	9665939765
2	VARAD SUDAM BHALERAO	Bhartiya Bal Vidya Mandir,Prabhavati Nagar,Pedgaon Road,Parbhani	Disaster Rover And military Defence	Varsharani Baburao Chavan	varsharani.chavan1234@gmail.com	9960751136
3	SHRITEJ RAHUL RAUT	RAYAT ENGLISH MEDIUM SCHOOL KARAD , Satara	SHETKARI APP	SADAN ARJUN SURYAVANSHI	sadan.suryawanshi@gmail.com	9766080545
4	MOHIT MAHESH RAUT	Gramin Vikas Vidyalaya, Salwa Ta. Mouda, Dist. Nagpur	Water Management for Public Places	Laxmikant J. Bante	graminvikasvid.salwa@gmail.com	9850498301
5	ARCHIT VIKRANT VANMALI	Bharatiya Vidya Bhavan's Lloyds Vidya Niketan	INTEGRATED MULTIDISASTER DETECTION AND EARLY ALERT SYSTEM USING ARDUINO FOR ENHANCED HUMAN SAFETY	Puja Shukla	blvn47@rediffmail.com , principalblvn@gmail.com	9860146444

Participant Teacher List for 35th Western India Science Fair(WISF)-2026-27

अ.क्र.	शिक्षकांचे नाव	शाळेचे नाव व पत्ता	प्रतिकृतीचे नाव	E-MAIL	मोबाईल क्रमांक
1	SANDIP T. PALKE	JAYHIND VIDYALAYA, K. TADWALE, DHARASHIV	KARMVEER MATHS EXPRESS	sandippalke29@gmail.com	8888792971
2	VIKAS P. SARKALE	KRANTIDEVI SAVITRIBAI FULE VIDYALAYA, NANAND, LATUR	MOBILE APP & 3 D BOOK	sarkalevikas@gmail.com	9890216522
3	RAJENDRAKUMAR VAINKUTHAM GANPURAPU	SHASKIY MADHYAMIK ASHRAMSHALA MULCHERA GADCHIROLI	LEARNING SCIENCE WITH FUN	rajendrakumar.g486@gmail.com	8275420099

SISENP/395/2026-DIR-SISE

I/2898577/2026

Ministry of Culture
Government of India

सत्यमेव जयते

Nehru Science Centre
A Unit of National Council of Science Museums
Ministry of Culture, Government of India

पश्चिमी भारत विज्ञान मेला 2026-2027

Western India Science Fair

GUIDE BOOK

11th - 13th January 2027

Nehru Science Centre, Mumbai
A Unit of National Council of Science Museums, Ministry of Culture, Govt. of India





परिचय

INTRODUCTION

Discover. Create. Innovate!

A Science Fair is a platform where curiosity meets creativity! It gives students an opportunity to explore scientific ideas, investigate real-world problems and present their own innovations.

Through experiments, models and working projects, students learn by doing, share ideas and gain confidence in communicating science.

Why Participate?

- Explore scientific ideas through hands-on learning.
- Develop creativity and problem-solving skills.
- Turn your ideas into working models and experiments.
- Share your discoveries with fellow students and experts.
- Build confidence through presentation and interaction.

ABOUT NATIONAL COUNCIL OF SCIENCE MUSEUMS (NCSM)

The National Council of Science Museums (NCSM), under the Ministry of Culture, Government of India, is dedicated to promoting science awareness and scientific temper through science centres, museums, exhibitions and educational programmes.

Nehru Science Centre, Mumbai, one of the national-level science centres under NCSM, organises the Western India Science Fair to encourage young innovators and promote hands-on science learning.

ABOUT WESTERN INDIA SCIENCE FAIR (WISF)

Science Fairs provide students with opportunities to showcase their scientific creativity and innovative projects. Through participation at school, district, state and zonal levels, students get an opportunity to showcase their talent, interact with experts and take their ideas to bigger platforms.

The Western India Science Fair brings together talented students and teachers from seven States/UTs: Chhattisgarh, Goa, Gujarat, Madhya Pradesh, Maharashtra, Rajasthan, and Dadra & Nagar Haveli and Daman & Diu.

Each State or Union Territory shall organize District Level Fairs and select suitable number of Student and Teacher Projects (approx. 80 students Projects & 20 Teacher Projects) for the State Level Fair. From students' projects maximum 5 Team Projects (max. 02 students & 01 guide teacher) and 3 Teaching Aids (individual) can participate in the Zonal Fair from amongst the participants at each State Level Fair and maximum 3 Team Projects and 3 Teaching Aids from each UT level fair.

The following number of projects will be selected at the State/UT Level Science Fairs and will participate in the Western India Science Fair 2026-27 to be held at Nehru Science Centre, Mumbai during **11th – 13th January 2027**.

SR. NO.	STATE / UT	NO. OF STUDENTS' PROJECTS	NO. OF TEACHING AIDS
1	CHHATTISGARH	5	3
2	GOA	5	3
3	GUJARAT	5	3
4	MADHYA PRADESH	5	3
5	MAHARASHTRA	5	3
6	RAJASTHAN	5	3
7	DADRA & NAGAR HAVELI AND DAMAN & DIU	3	3

OBJECTIVES OF SCIENCE FAIR

Research is a systematic process through which people generate new knowledge about themselves and the world around them to answer questions or solve problems. While choosing the problem, it is important to consider how the proposed research could expand existing knowledge and improve the quality of human life. Similarly, engineering endeavours apply acquired knowledge to develop new ideas, processes and technologies that address human needs and challenges.

Science Fairs seek to nurture this spirit of inquiry, critical thinking, problem-solving and research among young minds. Student projects are excellent examples of inquiry-based learning, which emphasises a hands-on approach to understanding science. Instead of relying solely on lectures and textbooks, students learn by asking questions, conducting research, experimenting and drawing conclusions.

Science Fairs also provide a platform for young innovators from different regions and countries to come together, present their work and exchange ideas. Such interactions offer opportunities to gain recognition through awards, build connections for future collaboration, learn from students belonging to different cultures and develop lasting friendships.

विषय-सूची





1. Topics for the Fair

(i) Physics

Theories, principles and laws governing energy and the effect of energy on matter – solid state, optics, acoustics, particle, nuclear, atomic, plasma, super conductivity, fluid and gas dynamics, thermodynamics, semiconductors, magnetism, quantum mechanics, biophysics etc.

(ii) Computer Science

Study and development of computer hardware, software, engineering, internet networking and communications, graphics (including human interface), simulations/ virtual reality or computational science (including data structures, encryption, coding and information theory).

(iii) Mathematics

Development of formal logical systems or various numeral or algebraic computations and the application of these principles–calculus, geometry, abstract algebra, number theory, statistics, complex analysis and probability.

(iv) Engineering

Technology, projects that directly apply scientific principles to manufacturing and practical uses – civil, mechanical, aeronautical, chemical, electrical, photographic, sound, automation, marine, heating and refrigerating, transportation, environmental engineering etc.

(v) Environmental Science

Study of pollution (water and land) sources and their control, ecology etc.

(vi) Bio-Chemistry

Chemistry of life processes – molecular biology, molecular genetics, enzymes, photosynthesis, blood chemistry, protein chemistry, food chemistry, hormones etc.

(vii) Chemistry

Study of nature and composition of matter and laws governing it – physical chemistry, organic chemistry (other than biochemistry), inorganic chemistry, materials, plastic, fuels, pesticides, metallurgy, soil chemistry etc.

(viii) Earth & Space Sciences

Geology, Minerology, Physiography, Oceanography, Meteorology, Climatology, Astronomy, Speleology, Seismology, Geography etc.

(ix) Botany

Study of plant life-agriculture, agronomy, horticulture, forestry, plant taxonomy, plant physiology, plant pathology, plant genetics, hydroponics, algae etc.

2. Who can participate?

Students of Classes VIII to XII from recognised Indian schools (all boards) can participate through their respective District/State/UT-level competitions. Each team may consist of a maximum of 02 students.

3. What are we Looking For?

We encourage projects that demonstrate:

- Original ideas and creativity.
- Scientific understanding.
- Innovation and practical applications.
- Experimentation and research.
- Clear presentation and communication.

4. How to Conceive a Project?

(i) Selection of topic:
Pick up a subject out of the given topics and pick a problem/idea you want to study / investigate or develop.

(ii) Literature Review:
Go to libraries or Internet, if you have, and learn everything you get on your problem / idea. Observe related events and look for unexplained or unexpected results. Discuss with professionals in the field.

(iii) Organise:
Arrange everything you have learnt and narrow down your hypothesis.

(iv) Guide:
Choose your guide / sponsor / qualified scientist who could guide you in your project.

(v) Make a Timetable:
Make a strict calendar of your activity with the help of your guide. Enough time should be given to experimentation.

(vi) Plan Experiment:
Once the research plan has been drawn, write your researching procedure, exactly describing your method of experiment, steps etc. Discuss with your sponsor / guide.

(vii) Experimentation:
After a careful thought of experimental design, keep notes of every experiment, measurement and observation. Try all variable possibilities.



(viii) Examine Results:
After completion of experimentation organize your findings. If you got expected results as per your hypothesis, analyse the data and draw conclusions.

(ix) Modify Experimental set up / project:
After you have succeeded, put up your project in presentable form for the Fair. Display information, results and write the research paper, give title, contents, experiments, explanation, conclusion, acknowledgment and references.

5. Project Parameters:

Display & Safety Regulations

- Display in the form of panel structure of maximum size: 1220mm x 750mm x 2440 mm
- Posters or Details about the project may be pasted on the back panel with sticker tape.
- School banners will not be allowed to be pasted on back or front panel.

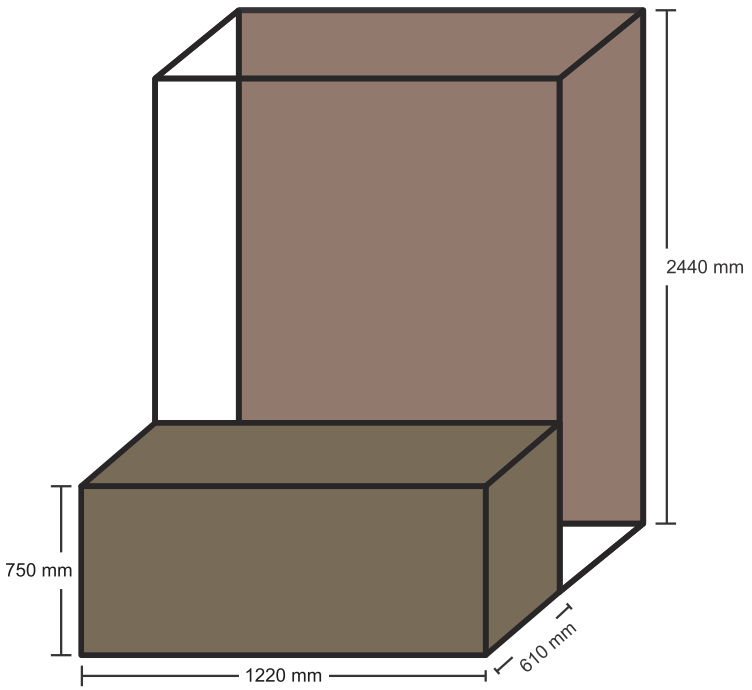

ELECTRICAL REGULATIONS

i) Finalists requiring 220 Volt AC for electrical circuits shall be provided an ISI mark 3-wire extension cord which is no more than 9 feet in length and which might be appropriate for the load and equipment.

ii) Electrical power supplied to projects is 220 Volt, AC single phase, 50 cycles only. Maximum circuit amperage/wattage available is determined by the electrical installation capacities of the exhibition hall and may be adjusted on site by the competent authority of the Centre.



6. Hints for good Project Presentation

a) Choose a Good Title
b) Display Photographs
c) Organise your presentation
d) Make your display eye catching
e) Correctly present your well-constructed project.

7. Project Report

Each project must be supplemented by a research report giving (i) purpose of experiment, (ii) hypothesis, (iii) procedures used, (iv) data, (v) conclusion, (vi) usefulness of the experiment, (vii) references, (viii) acknowledgment.

8. Selection Procedure

Selection of projects for higher stage will be done on the following basis :

Project	Students' Projects Team	Teaching Aids
Creative ability	25	30
Scientific thoughts & engineering goals	25	30
Thoroughness	12	–
Skill	12	15
Clarity	10	10
Teaching value	–	15
Team work	16	–

9. Calendar of Science Fair

Following dates shall be adhered to for completing various levels of Fair:

Organisation of State / UT level Fairs (by each State/UT) :		Latest by **24th December 2026**
Organisation of Western Zonal Fair (WISF)	:	**11th-13th January, 2027**

10. Fair Finances / Funds

For the Western India Science Fair the respective State/ UT will bear the expenses relating to the travel of students and TA/ DA of teacher participants to and fro from the respective schools to the venue of the Western India science Fair. Expenses for organization of the Western India Science Fair such as local hospitality, boarding & lodging, will be borne by Nehru Science Centre, Mumbai.

In case of State/ UT level fair the entire expenses will be borne by the State Government/Education Departments/ Dept. of Science & Technology.



11. How to Participate?

Contact your school authorities or State Education Departments for details, or you can contact for further information to:

Nehru Science Centre
Dr. E. Moses Road, Worli, Mumbai - 400 018,
Ph: (022) 3105 9020/ 9021, +91 7021115267
E-mail : education@nehrusciencecentre.gov.in

Western Zone: Chhattisgarh, Goa, Gujarat, Madhya Pradesh, Maharashtra, Rajasthan, Dadra & Nagar Haveli and Daman & Diu.

12. Awards / Prizes

As per the enclosed Annexure.

संस्कृति मंत्रालय
भारत सरकार
Ministry of Culture
Government of India
सत्यमेव जयते

नेहरु विज्ञान केन्द्र
राष्ट्रीय विज्ञान संग्रहालय परिषद् की इकाई
संस्कृति मंत्रालय, भारत सरकार
Nehru Science Centre
A Unit of National Council of Science Museums
Ministry of Culture, Government of India

NEHRU SCIENCE CENTRE
(National Council of Science Museums)
Ministry of Culture, Govt. of India
Dr. E. Moses Road, Worli, Mumbai 400018

STUDENTS' PROJECT TEAM

Entry Form — Western India Science Fair 2026-27

1. Name(s) of the Student(s) (In Block Capital Letters) : I.....
   : II.....
2. Whether member of any Science Club? : Yes / No
   If Yes, write the name of the Science Club : .....
   : .....
3. Name of the Guide Teacher : .....
4. Name & Address of the School : .....
   .....
   .....
   E-mail : .....
   Phone:..... Fax: .....
5. Name of the Project : .....
6. Scientific theme of the Project : .....
7. Material / Apparatus used : .....
8. Brief Description : Maximum 500 words, Attach separate sheet please.
   (Please highlight uniqueness of the project)
   a) Working details (250 words) : .....
   b) Synopsis (250 words) : .....
9. Diagram : Attach separate sheet/s
10. Application / Usage : .....
11. Approximate cost of the project : .....
12. Requirement of display : Area:_____x _____ mm Power: AC / DC
    Maximum space available Table 1220 mm x 750 mm with a panel on backside
13. Special requirements, if any : .....
    (e.g. water, darkroom etc.)
14. Signature of the Student : I.....
    : II.....
15. Signature of the Teacher : .....

(Seal of the School) (Signature of the Principal)

संस्कृति मंत्रालय
भारत सरकार
Ministry of Culture
Government of India
सत्यमेव जयते

नेहरु विज्ञान केन्द्र
राष्ट्रीय विज्ञान संग्रहालय परिषद् की इकाई
संस्कृति मंत्रालय, भारत सरकार
Nehru Science Centre
A Unit of National Council of Science Museums
Ministry of Culture, Government of India

NEHRU SCIENCE CENTRE
(National Council of Science Museums)
Ministry of Culture, Govt. of India
Dr. E. Moses Road, Worli, Mumbai 400018

Entry Form — Western India Science Fair 2026-27

TEACHING AID

1. Name of the Teacher (In Block Capital Letters) : .....
2. Whether member of any Science Club. : Yes / No
   If Yes, write the name of the Science Club : .....
3. Name & Address of the School : .....
   .....
   .....
   E-mail:.....
   Phone:..... Fax: .....
4. Name of the Teaching Aid : .....
5. Scientific theme of the Teaching Aid : .....
6. Material / Apparatus used : .....
7. Brief Description : Maximum 500 words, Attach separate sheet, please.
   (Please highlight uniqueness of the project) : .....
   a) Working details (250 words) : .....
   b) Synopsis (250 words) : .....
8. Diagram : Attach separate sheet/s
9. Application / Usage : .....
10. Approximate cost of the Teaching Aid : .....
11. Requirement of display : Area:_____x _____mm Power: AC / DC
    Maximum space available Table 1220 mm x 750 mm with a panel on backside
12. Special requirements, if any : .....
    (e.g. water, darkroom etc.)
13. Signature of the Teacher : .....

(Seal of the School) (Signature of the Principal)

परिशिष्ट

ANNEXURE

Prizes for Western India Science Fair 2026-27

Students' Projects :

Best Project of the Fair (Team of two participants)	: Rs. 3000/- each
Guide teacher of 1st prize winner	: Rs. 2000/-
School of 1st prize winner	: Rs. 5000/- (In the form of science kits, books & CDs)
State Best Award (Except Best Project of the Fair winner State)	: Rs. 4000/- (1 no. each)
Guide Teacher of State Best Prize Winner	: Rs. 2000/- (1 no. each)
School of State Best Prize Winner	: Rs. 3000/- (In the form of science kits, books & Cds) -(1 no. each)

Teachers' Projects :

1st Prize (individual)	: Rs. 2000/- (1 no.)
2nd Prize (individual)	: Rs. 1500/- (1 no.)
3rd Prize (individual)	: Rs. 1000/- (1 no.)










पश्चिमी भारत विज्ञान मेला
WESTERN INDIA SCIENCE FAIR
NCSM


विज्ञान मेला
SCIENCE FAIR
10th DECEMBER 2025
NEHRU SCIENCE CENTRE










पश्चिमी भारत विज्ञान मेला
WESTERN INDIA SCIENCE FAIR






10th DECEMBER 2025
NEHRU SCIENCE CENTRE
NCSM


10 दिसम्बर 2025




पश्चिमी भारत विज्ञान मेला
WESTERN INDIA SCIENCE FAIR










पश्चिमी भारत विज्ञान मेला
WESTERN INDIA SCIENCE FAIR
13 दिसम्बर 20
13th DECEMBER 2025
NEHRU SCIENCE CENTRE







SISENP/395/2026-DIR-SISE I/2898577/2026



Ministry of Culture
Government of India
सत्यमेव जयते

Nehru Science Centre
A Unit of National Council of Science Museums
Ministry of Culture, Government of India

नेहरु विज्ञान केन्द्र, मुंबई

राष्ट्रीय विज्ञान संग्रहालय परिषद् की इकाई, संस्कृति मंत्रालय, भारत सरकार

NEHRU SCIENCE CENTRE

A Unit of National Council of Science Museums,
Ministry of Culture, Govt. of India

Dr. E. Moses Road, Worli, Mumbai-400 018
(022) 3105 9020, 3105 9021, +91 70211 15267
https://nehrusciencecentre.gov.in education@nehrusciencecentre.gov.in

Follow us on:

https://www.facebook.com/nehrusciencecentre | https://www.youtube.com/c/NSCMumbai
https://twitter.com/NSCmumbai | https://www.instagram.com/nehrusciencecentremumbai/